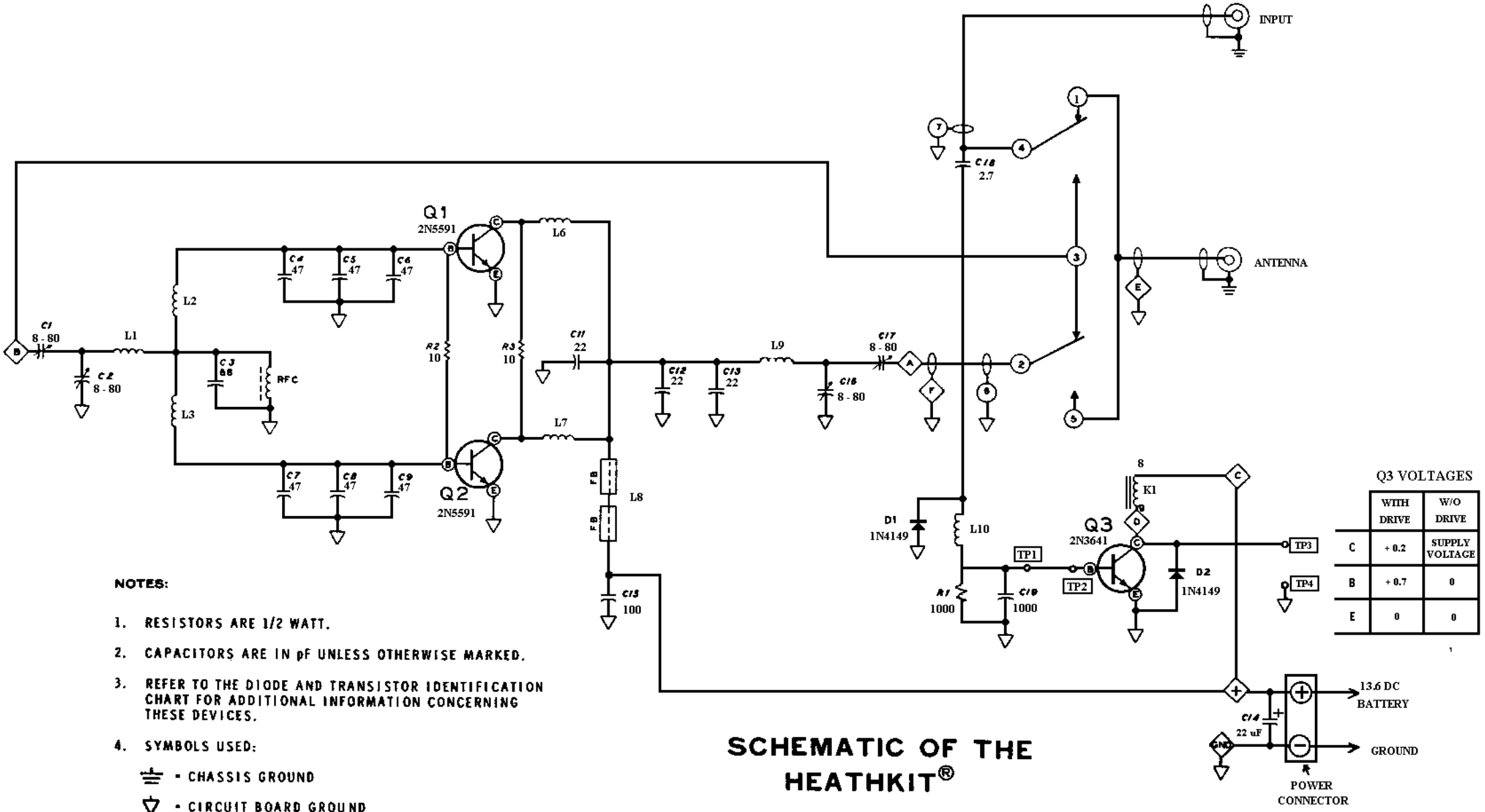

Q3 VOLTAGES

	WITH DRIVE	W/O DRIVE
C	+ 0.2	SUPPLY VOLTAGE
B	+ 0.7	0
E	0	0

NOTES:

1. RESISTORS ARE 1/2 WATT.
2. CAPACITORS ARE IN pF UNLESS OTHERWISE MARKED.
3. REFER TO THE DIODE AND TRANSISTOR IDENTIFICATION CHART FOR ADDITIONAL INFORMATION CONCERNING THESE DEVICES.
4. SYMBOLS USED:
   - CHASSIS GROUND
   - CIRCUIT BOARD GROUND
   - RELAY TERMINAL
   - CIRCUIT BOARD CONNECTION
   - TERMINAL STRIP CONNECTION
   - FB - FERRITE BEAD

SCHEMATIC OF THE HEATHKIT®

2-METER FM AMPLIFIER MODEL HA-202