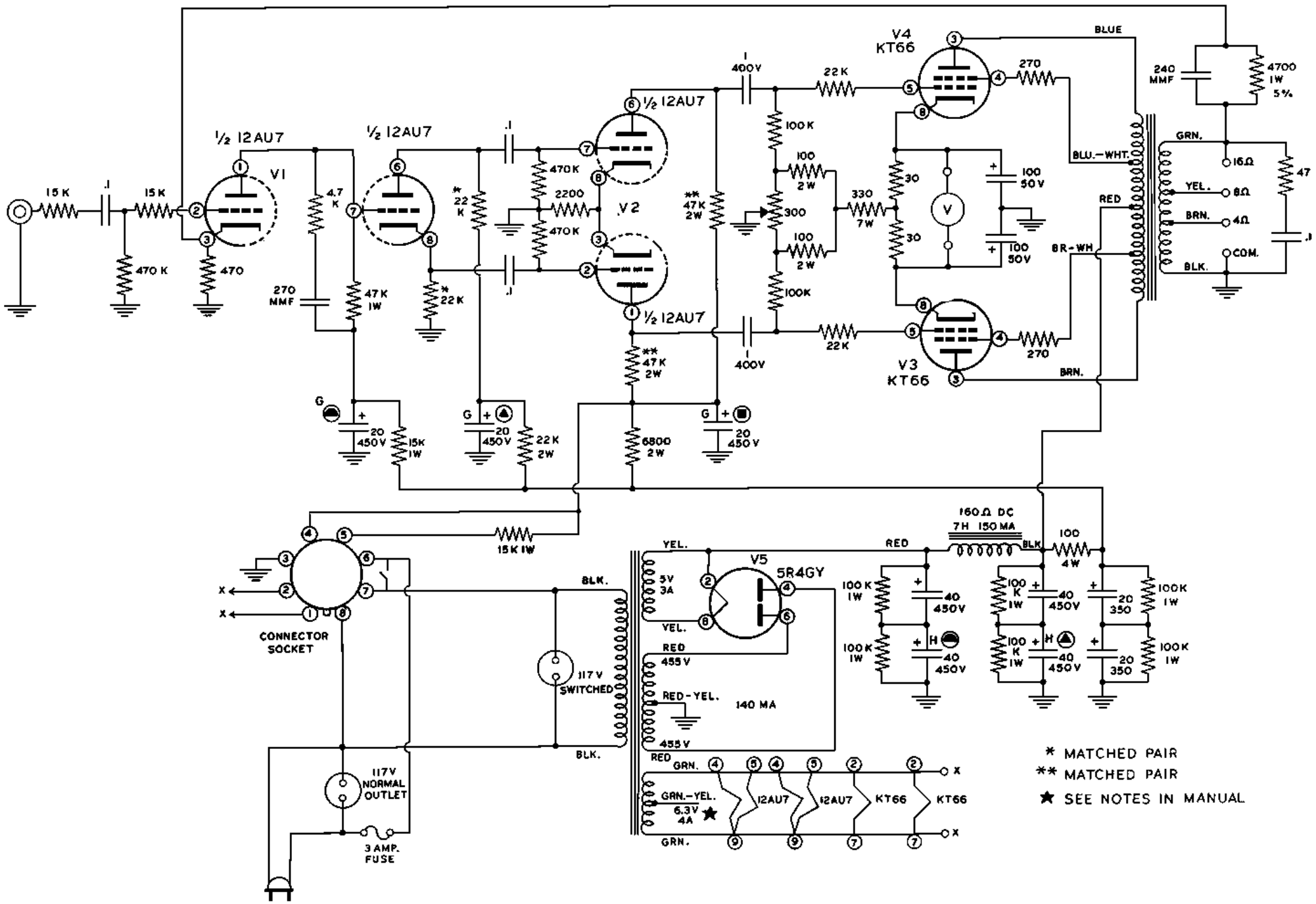

THE HEATHKIT W-5M HIGH FIDELITY AMPLIFIER