SCHEMATIC OF THE HEATHKIT® WEATHER STATION MODEL ID-1290

ESISTORS ARE 1/2 WATT. VALUES ARE SHOWN IN OHMS.
ANS TO MULTIPLY THE VALUE SHOWN BY 1,000. A CONTROL
ABLE RESISTOR) HAS ONE CONTACT SHOWN BY AN
WHEAD.

CITOR VALUES ARE SHOWN IN MICROFARADS.

EVIATIONS:
- C = CAPACITOR
- D = DIODE
- L = LAMP
- M = METER
- PM = PERMANENT MAGNET
- Q = TRANSISTOR
- R = RESISTOR
- S = SWITCH
- T = TRANSFORMER
- TP = TEST POINT

ROLS:
- LETTERED CIRCUIT BOARD HOLE
- CIRCUIT BOARD GROUND
- A DC VOLTAGE TO GROUND
- AN AC VOLTAGE
- A DC VOLTAGE, S201 OPEN
- A DC VOLTAGE, S201 CLOSED

PONENTS ARE NUMBERED ON THE SCHEMATIC IN THE
OWING GROUPS:
- 1 - 99 RECEIVER CIRCUIT BOARD
- 101 -199 WIND DIRECTION TRANSMITTER
- 201 -299 WIND SPEED TRANSMITTER

NSISTORS:

NPN TRANSISTOR

PNP TRANSISTOR
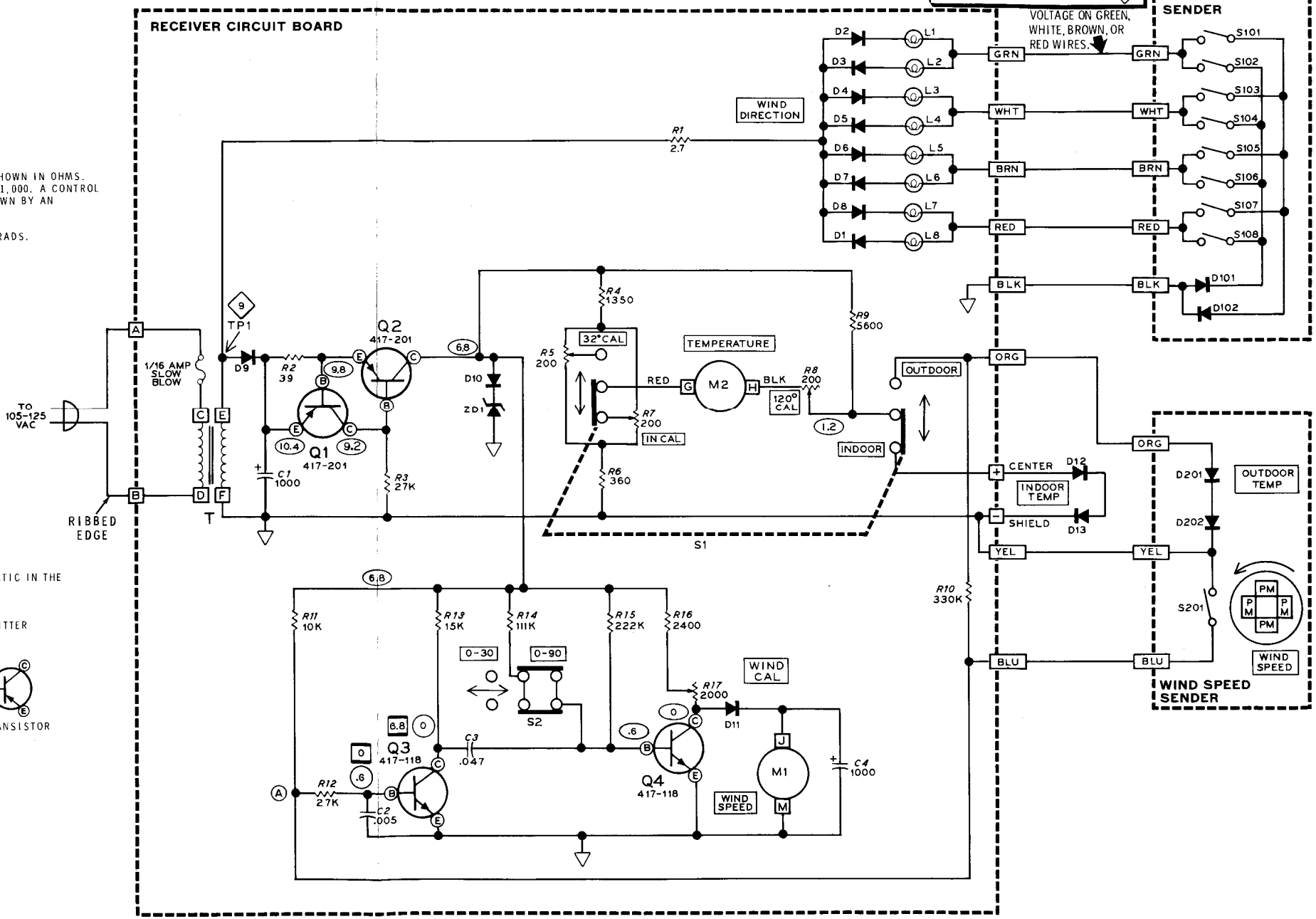
B = BASE
C = COLLECTOR
E = EMITTER