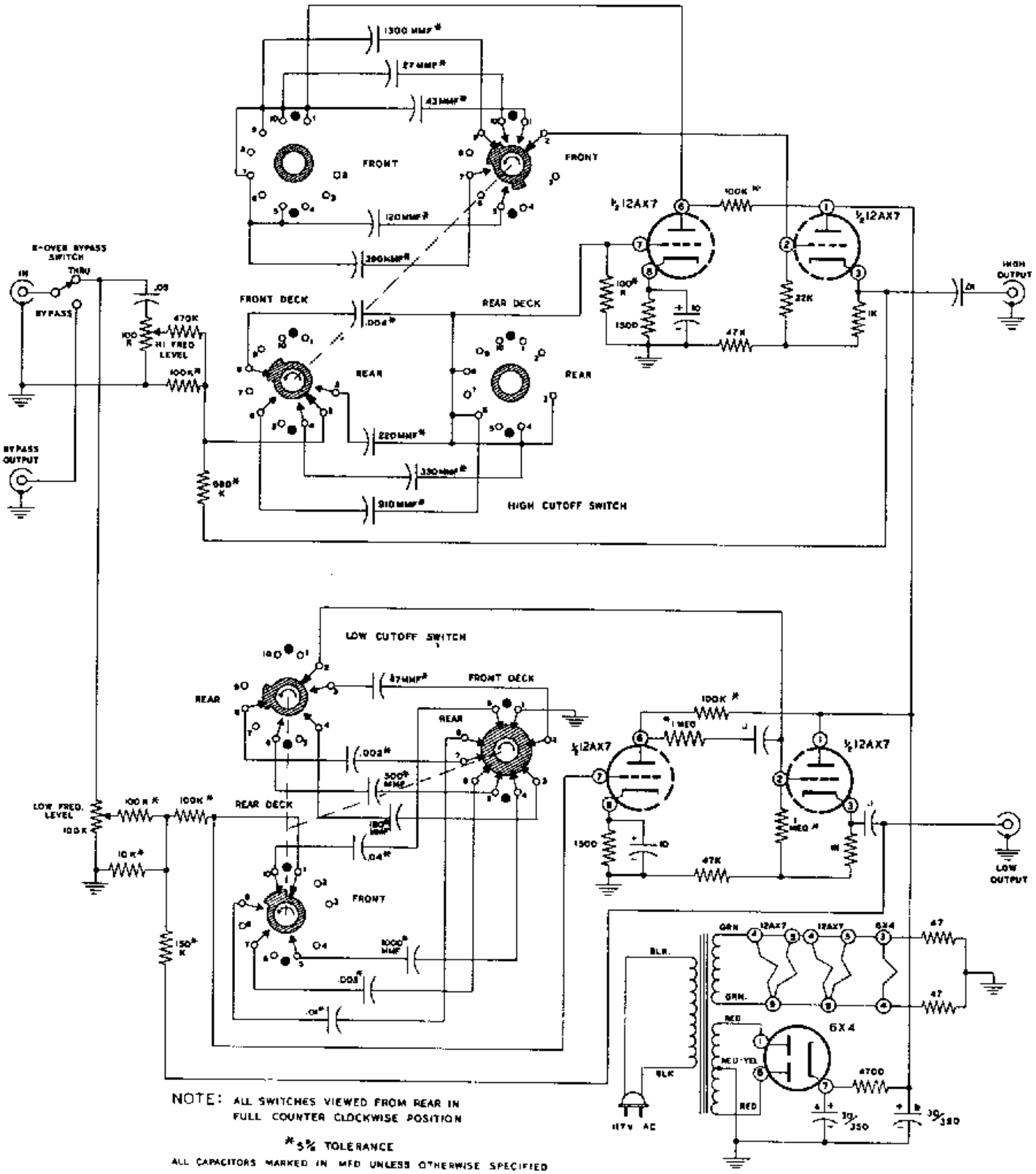

NOTE: ALL SWITCHES VIEWED FROM REAR IN FULL COUNTER CLOCKWISE POSITION

*5% TOLERANCE

ALL CAPACITORS MARKED IN MFD UNLESS OTHERWISE SPECIFIED

HEATHKIT ELECTRONIC CROSSOVER

MODEL XO-1